BRONCO MOTORSPORTS

California State Polytechnic University, Pomona
Formula SAE

2025-2026 Design Binder

Steering

Rayyan Hisham, Brian Gho

Table of Contents

BM 26 Full Vehicle Objectives 3
Purpose of Subsystem 4
FSAE 2026 Rules 5
Background/Theory 7
Design Procedure 7
Design Revisions 12
CAD Models 23
Simulations 27
Manufacturing 28
Testing 29
Auxiliary 31
Works Cited 30

BM 26 Full Vehicle Objectives

This year's car is designed mainly to improve handling and make it easier for drivers to control at high speeds. One of our main goals is to reach about 1.4g in cornering while keeping a balanced weight distribution of 47% in the front and 53% in the rear. This helps the car stay stable and predictable in turns. We also want drivers to be consistent, with less than 3% difference between drivers and less than 1.5% variation for the same driver. Braking performance is another key focus. The system is designed to respond smoothly and predictably so drivers can control how quickly the car slows down. We also made sure the car does not have sudden behaviors like snap oversteer, which can make it hard to handle. To support performance, the car is kept under 470 lb to stay light and agile. The cooling system keeps the engine between 190–210°F so it runs well during long runs. Reliability is also important, with over 800 km of testing and strict goals to avoid leaks or electrical issues. Overall, the car is built to handle well, stay consistent, and perform reliably.

Vehicle Dynamics Objectives

The vehicle dynamics goals for this year focus on maximizing lateral performance, consistency, and efficient setup development to improve overall lap times. A primary target is achieving and maintaining steady-state lateral acceleration around 1.4g, based on previous top skid-pad results. The car is also designed with an adjustable lateral load transfer distribution (LLTD) range of approximately 38.8% to 46.5%, allowing tuning to reach peak cornering performance under different conditions. Consistency over time is another key objective. The team aims to limit average vehicle setup changes to under 15 minutes by improving understanding of vehicle behavior through over 36 hours of testing. Additionally, a minimum dynamic ride height of 0.15 inches is maintained to balance aerodynamic performance with reliable operation, ensuring downforce gains are not lost due to excessive ride height variation. Simulation plays a major role in guiding these decisions. MATLAB-based endurance lap time simulations, including using the Milliken Moment Method Diagram (MMMD), are used to evaluate parameters such as center of gravity height, weight distribution, and mass affect lap time. Results show that reducing CG height and total mass significantly improves performance, with optimal weight distribution near 45–47.5% front. Finally, the design emphasizes lateral grip as a priority, reflecting the demands of endurance tracks. This is supported by improved chassis design, optimized damper placement, and increased sensor data collection to refine setup and maximize real-world performance.

Steering Subsystem Objectives

The goals for the steering system this year were to minimize dynamic bump-steer, reduce steering lash and ratio variation, while keeping the mass of the system to a minimum. From previous years, the overall subjective feeling of the system from the driver's perspective was adequate in terms of performing its job to its intended purpose. However, to save weight, the packaging constraints of the steering column, from chassis shrinkage, had to be reduced. This means that a completely new steering system had to be designed from scratch. In addition, from previous year's testing, the tie-rods never experienced any drastic failure despite being assembled and used in active testing for the majority of last season. So, it was decided that the tie-rods themselves could have a mass reduction, thus satisfying one of the major vehicle-related goals of the team.

Purpose of Subsystem

Steering Column:

- Converts rotational motion at the steering wheel into rotational motion at the steering rack pinion gear while minimizing lash and compliance.
- Influences the steering ratio variance that may deviate from the static steering ratio when at steering wheel input angles. This is achieved by keeping the spatial angles of two cardan joints similar.
- The direct subassembly that affects driver feedback and feel
- Introduced as secondary housing for electronics that connect directly to the steering wheel.

Steering Rack:

- Converts rotational motion at the steering column's output to linear motion on the rack.
- Depending on its longitudinal position, it may affect dynamic toe and the angular delta between the left and right steering angles.

Tie-rods (Front & Rear):

- Act as a rigid connection between the overall steering system and the actual wheels and tires.
    - Directly influences your static/dynamic toe.
    - Can act as a quick toe adjustment for vehicle dynamic setups.
- Pushes or pulls the steering arm on the upright to cause the tires to rotate for steering.
- For the rears, help restrain the orientation of the upright/knuckle to prevent rotation.

Steering Column Holder/Support:

- Act as a rigid mounting point for the steering input shaft.
- Allows a mounting location for the input shaft mount for the steering column.
- Steering holder constraints input shaft axially, and free to rotate about axial.

FSAE 2026 Rules

V.3.2 Steering

V.3.2.1 The Steering Wheel must be mechanically connected to the front wheels

V.3.2.2 Electrically operated steering of the front wheels is prohibited

V.3.2.3 Steering systems must use a rigid mechanical linkage capable of tension and compression loads for operation

V.3.2.4 The steering system must have positive steering stops that prevent the steering linkages from locking up (the inversion of a four bar linkage at one of the pivots). The stops:

a. Must prevent the wheels and tires from contacting suspension, bodywork, or Chassis during the track events

b. May be put on the uprights or on the rack

V.3.2.5 Steering system free play must be less than seven degrees (7°) total measured at the steering wheel

V.3.2.6 The steering rack must be mechanically attached to the Chassis **F.5.14**

V.3.2.7 Joints between all components attaching the Steering Wheel to the steering rack must be mechanical and be visible at Technical Inspection. Bonded joints without a mechanical backup are not permitted.

V.3.2.8 Fasteners in the steering system are **Critical Fasteners**, see **T.8.2**

V.3.2.9 Spherical rod ends and spherical bearings in the steering must meet **V.3.1.5 above**

V.3.2.10 Rear wheel steering may be used.

a. Rear wheel steering must incorporate mechanical stops to limit the range of angular movement of the rear wheels to a maximum of six degrees (6°)

b. The team must provide the ability for the steering angle range to be verified at Technical Inspection with a driver in the vehicle

c. Rear wheel steering may be electrically operated

V.3.3 Steering Wheel

V.3.3.1 In any angular position, the Steering Wheel must meet **T.1.4.4**

V.3.3.2 The Steering Wheel must be attached to the column with a quick disconnect.

V.3.3.3 The driver must be able to operate the quick disconnect while in the normal driving position with gloves on.

V.3.3.4 The Steering Wheel must have a continuous perimeter that is near circular or near oval.

The outer perimeter profile may have some straight sections, but no concave sections. "H", "Figure 8", or cutout wheels are not permitted.

V.3 SUSPENSION AND STEERING

V.3.1 Suspension

V.3.1.1 The vehicle must have a fully operational suspension system with shock absorbers, front and rear, with usable minimum wheel travel of 50 mm, with a driver seated

V.3.1.2 Officials may disqualify vehicles which do not represent a serious attempt at an operational suspension system, or which demonstrate handling inappropriate for an autocross circuit

V.3.1.3 All suspension mounting points must be visible at Technical Inspection by direct view or by removing any covers

V.3.1.4 Fasteners in the Suspension system are **Critical Fasteners**, see **T.8.2**

V.3.1.5 All spherical rod ends and spherical bearings on the suspension and steering must be one of:

- Mounted in double shear
- Captured by having a screw/bolt head or washer with an outside diameter that is larger than spherical bearing housing inside diameter.

T.1.3.3 All moving suspension and steering components and other sharp edges inside the cockpit between the Front Hoop and a vertical plane 100 mm rearward of the pedals must be covered by a shield made of a solid material.

Moving components include, but are not limited to springs, shock absorbers, rocker arms, anti-roll/sway bars, steering racks and steering column CV joints.

T.1.3.4 Covers over suspension and steering components must be removable to inspect the mounting points

T.1.2 Internal Cross Section

T.1.2.1 Requirement:

a. The cockpit must have a free internal cross section

b. The template shown below must pass through the cockpit

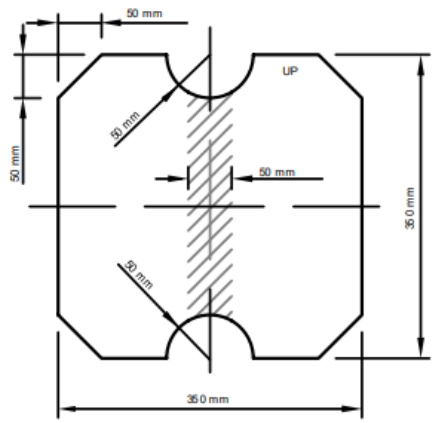

Template maximum thickness: 7 mm

T.1.2.2 Conduct of the test. The template:

a. Will be held vertically and inserted into the cockpit opening rearward of the rearmost portion of the steering column.

b. Will then be passed horizontally through the cockpit to a point 100 mm rearwards of the face of the rearmost pedal when in the inoperative position

c. May be moved vertically inside the cockpit

T.1.2.3 During this test:

a. If the pedals are adjustable, they must be in their most forward position.

b. The steering wheel may be removed

c. Padding may be removed if it can be easily removed without the use of tools with the driver in the seat

d. The seat and any seat insert(s) that may be used must stay in the cockpit

e. Cables, wires, hoses, tubes, etc. must not block movement of the template

f. The steering column and associated components may pass through the 50 mm wide center band of the template.

For ease of use, the template may contain a full or partial slot in the shaded area shown on the figure

F.5.14 Steering Protection

Steering system racks or mounting components that are external (vertically above or below) to the Primary Structure must be protected from frontal impact.

The protective structure must:

a. Be **F.3.2.1.n** or Equivalent

b. Extend to the vertical limit of the steering component(s)

c. Extend to the local width of the Chassis

d. Meet **F.7.8** if not welded to the Chassis

Background/Theory

The steering system is a crucial subsystem that allows the driver to change the behavior and motion of the vehicle in the most direct way possible. Because it connects the rotational motion of the hand-wheel to a physical rotation of the front tires, it is important that design characteristics like **steering torque variation, steering ratio variation, compliance, and lash** are accounted for to allow the driver to have the most predictable control on the car's kinematics.

Lash:
Per rules, a **max lash angle of 7 degrees** is allowed end-to-end. Also known as play, it is typically measured by turning the steering wheel in one direction until the tires begin to pivot. Then place a mark on the steering wheel at a fixed reference point and turn the wheel in the opposite direction until the tires start to move again. It is important to minimize the amount of play in the steering system as they affect the time of driver input to steering output.

Phasing:
For the steering column assembly, a combination of **yoke-phasing** and achieving a certain angular delta between subsequent cardan joints is needed to de-couple vehicle motion from relying on mechanical design uncertainties to only needing to worry about vehicle dynamic pick up points (PuPs) intent. The point of having the yokes in phase is to allow their non-uniform velocities to cancel out within an intermediary connection. Having them out of phase makes the u-joints at a certain point in time for example, both hit either a peak or trough rotational velocity at the same time thus amplifying the non-uniformity of the steering column.

Angularity:
There are two types of angles of interest when utilizing universal/cardan joints which are the **spatial angles** which are a mostly obtuse angle that the yoke makes with the closest subsequent yoke (within a one-joint system) and their **complementary angles** which are simply 180 degrees subtracted by the spatial angle. Typically, you would want either angle terminologies to be equal between two separate cardan joint connections (double u-joint or 2 single u joints). This is to keep the velocity variation and torque variation to be minimal or close to none. In special cases, the independent u-joints may have a purposeful difference in complementary angles to achieve a specific type of variation that either a driver might want or is beneficial to vehicle handling behavior.

Compliance:
Rotational compliance of the steering column in conjunction with linear compliance of the tie-rods also contributes to a deviation in intended steer angle. This compliance is a combination of backlash present at all the geared connections (5) present through the steering column assembly and minimal linear and torsional deflection from steering columns and tie rods.

Bump Steer:
Typically, the designed geometry of the tie-rod working in conjunction with the geometry of the A-arms creates this dynamic toe displacement. The reason why it is useful to eliminate such a phenomenon is to decrease any additional steering angle output on the tires which deviate from the intended kinematics

that are desired. Using **Optimum Kinematics** software from OptimumG, the amount of dynamic toe can be graphed as a function of different heave events for each tire which are simulated given a suspension's geometry. From this, the amount of excess (non-intended) dynamic steer angle can be minimized by changing the various inboard and outboard pick-up points.

Dynamic Toe:
A useful tool to quantify the amount of dynamic toe needed to improve vehicle dynamic performance is the **Ackermann %** which describes what percentage of the measured difference in toe angle between the outside and inside wheels during a corner relative to a true 100% pro-Ackermann steering. The Optimum Kinematics definition of Ackermann % is shown here:

$$Ackerman = \tan^{-1}\left(\frac{wheelbase}{\frac{wheelbase}{\tan\delta_{outside}} - track_{front}}\right)$$

$$Ackerman_{percent} = \frac{\delta_{inside}}{Ackerman} \times 100$$

From the tire model, a graph of cornering force as a function of slip angle can be created. Because the hairpin turn was considered the most notable factor from the previous year's dynamic events, it is used as the basis for choosing the ideal slip angles from the tire model graph referenced before. Using past logged IMU data, and measurements of BM26 geometrical parameters, the steering angles for each wheel can be calculated. With the angular delta of those steer angles between the outside and inside wheels, the Ackermann % and Ackermann % variation that is needed can be found.

Static Toe:
This parameter can be directly tuned to see changes in vehicle handling behavior in addition to the already geometrically generated dynamic toe. The most common way to tune is through extending or contracting the tie-rods. Generally, toe-in increases stability, whereas toe-out increases control. Different combinations of toe-in or toe-out for either the front or rear wheels are essential for on-the-go vehicle setups that can immediately change dynamic car behavior.

Design Procedure – Pick up Points.

The pick-up points of the steering system (steering rack - tie-rod locations) are important in defining two important steering kinematic concepts:

1) **Ackermann %:**

From the previous year's analysis, we denoted that the Ackermann % the team ran for the BM25 car was suitable for the current BM26's steering geometry as well.

The steering geometry was designed to achieve the target Ackermann percentage at the **maximum steering condition** corresponding to the dominant corner (at full steering lock for a **hairpin** turn); the remainder of the curve is a natural result of the suspension geometry.

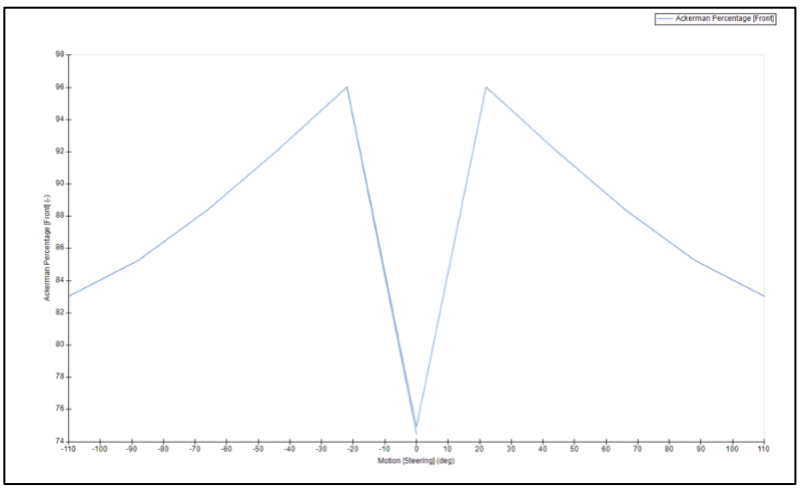

intended Ackermann % for BM26

2) **<u>Bump Steer:</u>**

Typically, heave affects both dynamic toe and steer angle as **separate effects**:

1) Dynamic Toe from Heave
    a. Any angular deflection of the wheel's heading relative to its static toe position from heave motion
2) Induced Steer Angle from Heave
    a. Not to be confused by dynamic toe, the induced steer angle gives physical steering wheel feedback because of the steer angle changing, particularly during turns.

Front Bump Steer Affecting Steer Angle:

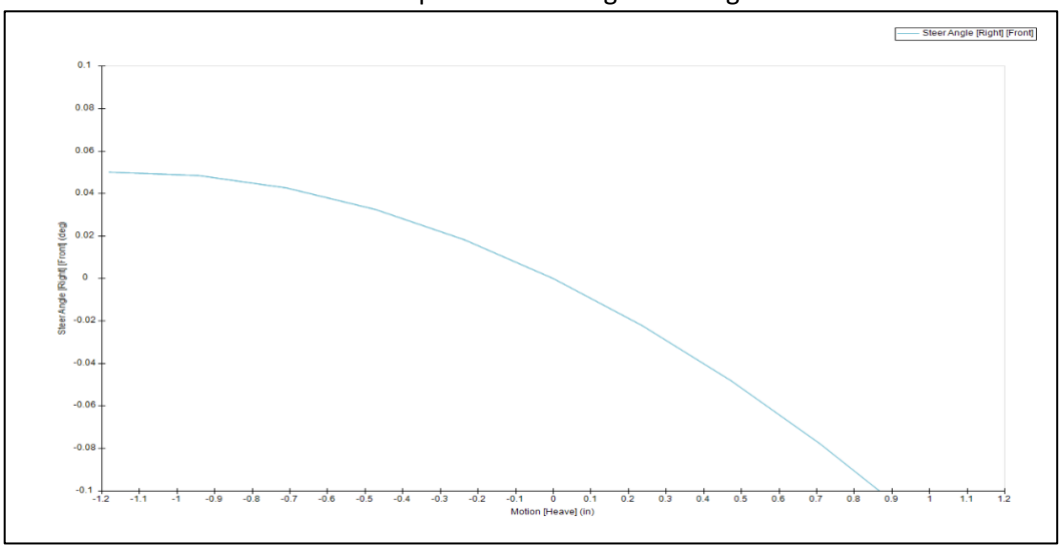

Rear Bump Steer Affecting Steer Angle:

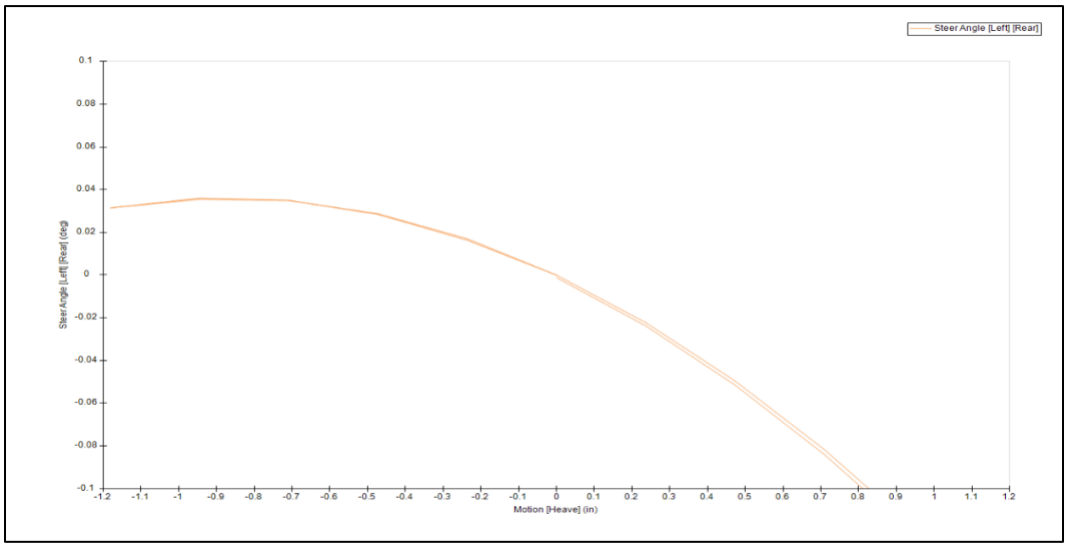

Front & Rear Bump Steer Affecting Dynamic Toe:

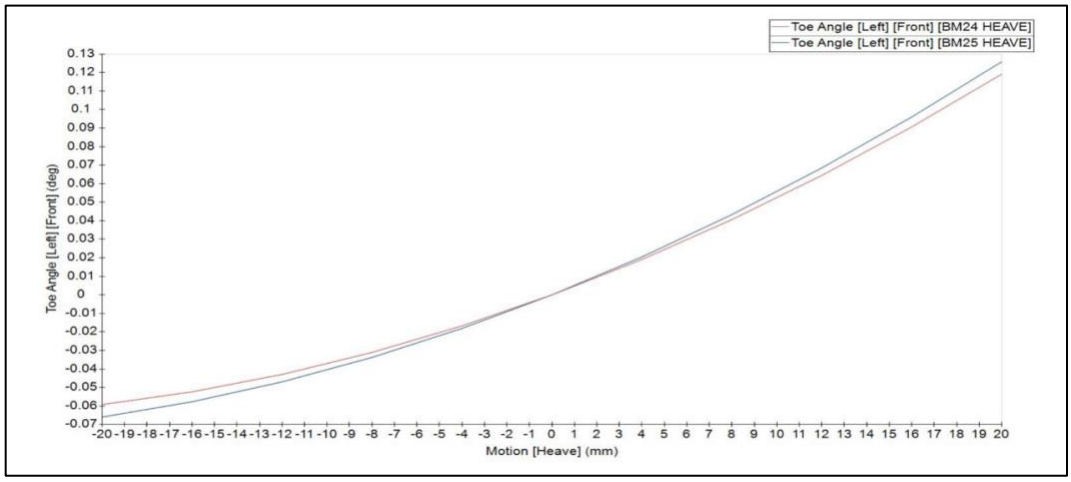

Design Procedure – Steering Column

Throughout the design cycle, different U-Joint setups were tested with a focus on reducing compliance and improving steering ratio variation based on driver preference. With multiple u-Joints available, a decision for the best one was based on compatibility, weight, design configuration (single vs. double U-joint), and price point of components. U-joints that were tested are as follows.

Setup 1: Woodward (steel 2x single Cardan joints)

Based on the 2025 design, the Woodward setup was initially deemed the safest design choice. One major constraint that was present in BM26 was the **tighter packaging,** which required tighter U-joint spatial angles. Although allowed spatial angles based on spec permitted for this design, **issues with binding**, and light lash induced (~ 4°), which was an increase over the BM25 design

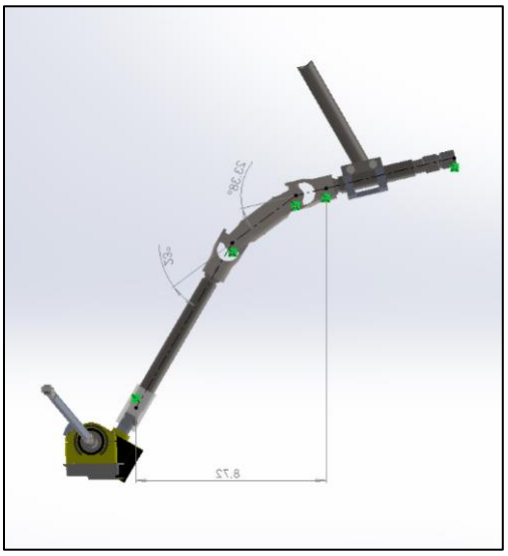

Setup 2: Borgeson (Steel Double cardan joint)

This design heavily simplified the steering column assembly, with fewer components, eliminating the intermediary shaft, and one u-joint assembly rather than two. One area where this design theoretically has an edge is the minimized spatial angles at both u-joint ends. This was due to a shorter u-joint compared to 2x Woodward u-joints. However, this design posed a major disadvantage. The elimination of an input shaft required a longer output shaft; This makes the output end of the u-joint unconstrained as it is subject to out-of-plane loads induced by the input torque. The allowed lateral play at the steering rack gear was **amplified** over the length of the output shaft and at its maximum when closest to the u joint. This ultimately caused **severe lash**, above the maximum limit, which made this design unfeasible. Some possible solutions to eliminate play were by adding a CF-nylon 3D-printed brace at the end of the u-joint, which also proved unsuccessful.

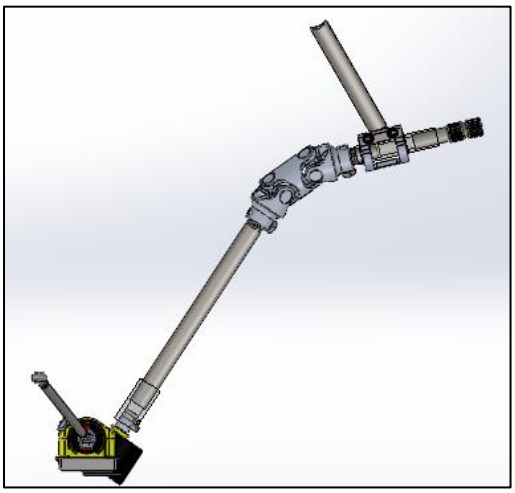

Setup 3: Borgeson (aluminum 2x Single Cardan joints)

This setup was particularly inspired by our successful BM16 car, which had implemented two aluminum U-joints. Due to a **spread-out placement** of the u-joints, the design required tighter-angle u-joints that were still within the operating range of the u-joints. This design also significantly reduced the weight of the column assembly, specifically due to the Al joint (190g each) vs. the steel counterparts (600g).

Base Steering Ratio Calculation:

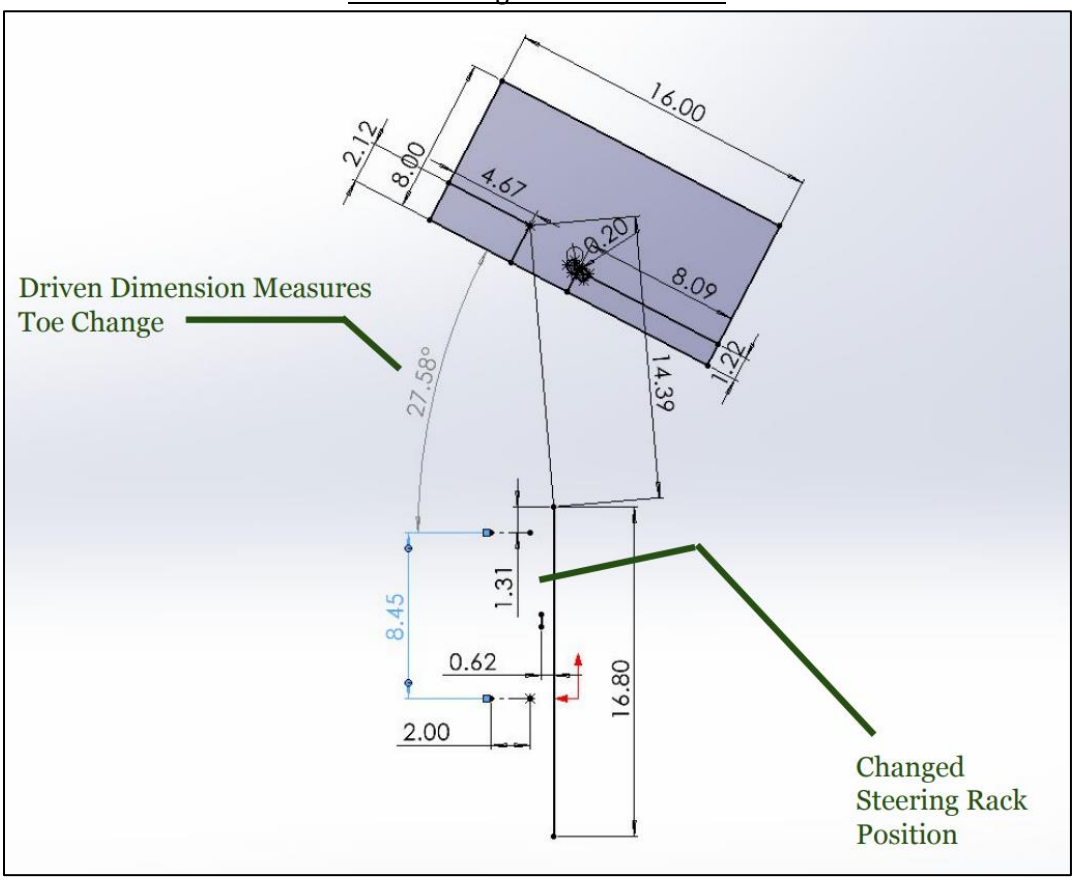

Based on the steering rack C-Factor, for each steering wheel input angle, the rack displacement is known. The image shows the transformation from rack displacement, which results in a toe angle change. Different sketch setups depending on whether BM25 or BM26 vehicle geometry is used to calculate the base steering ratio.

The rack displacements for the steering ratio calculations using the method of sketches are obtained by multiplying the KAZ Steering-Rack **C-Factor** by the **steering wheel input angle,** which is shown here:

Steering Input Angle (deg)	Rack Displacement (in)
-100.000	-1.308
-80.000	-1.047
-60.000	-0.785
-40.000	-0.523
-20.000	-0.262
0.000	0.000
20.000	0.262
40.000	0.523
60.000	0.785
80.000	1.047
100.000	1.308

$$C\ factor = \frac{Rack\ linear\ displacement}{Input\ Rotaional\ displacement}$$

$$= \frac{4.71''}{360\ degrees}$$

$$Steering\ ratio\ (SR) = \frac{\Delta\theta\ (steering\ wheel)}{\Delta\theta\ (road\ wheel)}$$

$$= \frac{4.15\ degrees}{1\ degree}$$

For the base steering ratio at 0 degrees steering wheel input angle, small steering rack displacements are simulated to calculate the angular toe delta. The results of the steering ratio calculations are shown here:

BM26 Calculated Steering Ratio:

Wheel input (deg) [Left (-) to Right (+)]	BM26 Outside Wheel Angle (Deg)	BM26 Outside Wheel Steer Ratio	BM26 Inside Wheel Angle (deg)	BM26 Inside Wheel Steer Ratio	BM26 AVG Steer Ratio
-100.000	-22.740	4.398	-27.580	3.626	4.012
-80.000	-18.320	4.367	-21.260	3.763	4.065
-60.000	-13.870	4.326	-15.460	3.881	4.103
-40.000	-9.350	4.278	-10.040	3.984	4.131
-20.000	-4.740	4.219	-4.910	4.073	4.146
0.000	0.000	4.149	0.000	4.149	4.149
20.000	4.740	4.219	4.910	4.073	4.146
40.000	9.350	4.278	10.040	3.984	4.131
60.000	13.870	4.326	15.460	3.881	4.103
80.000	18.320	4.367	21.260	3.763	4.065
100.000	22.740	4.398	27.580	3.626	4.012

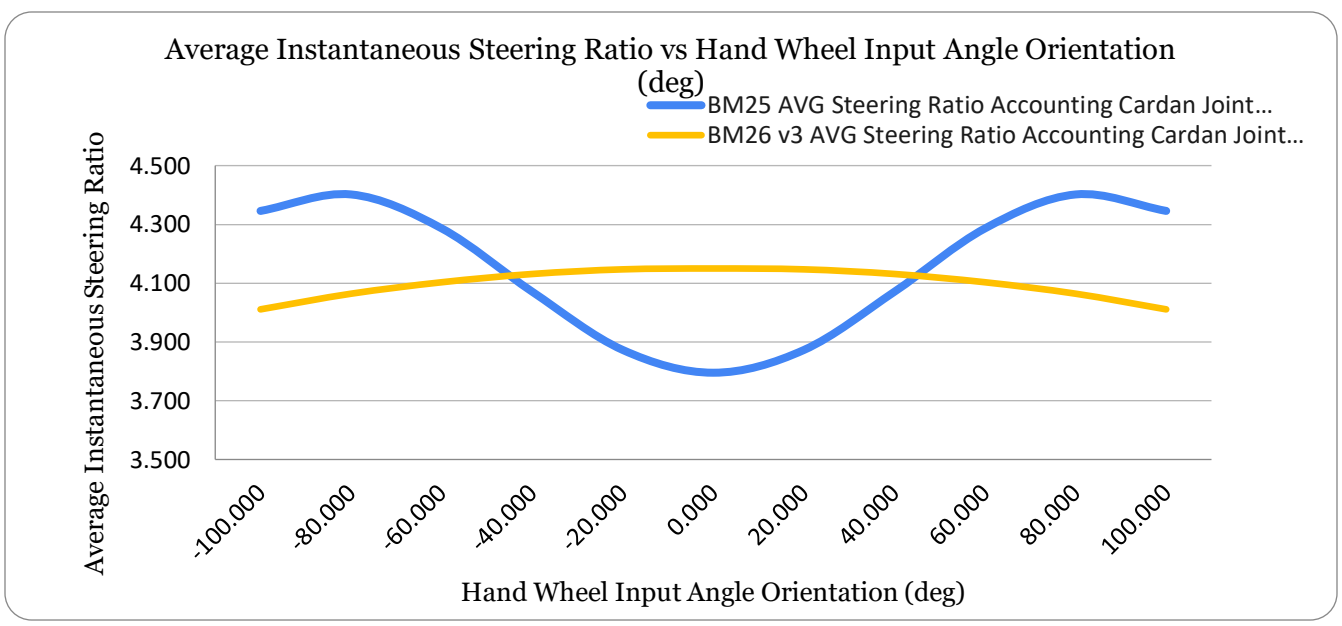

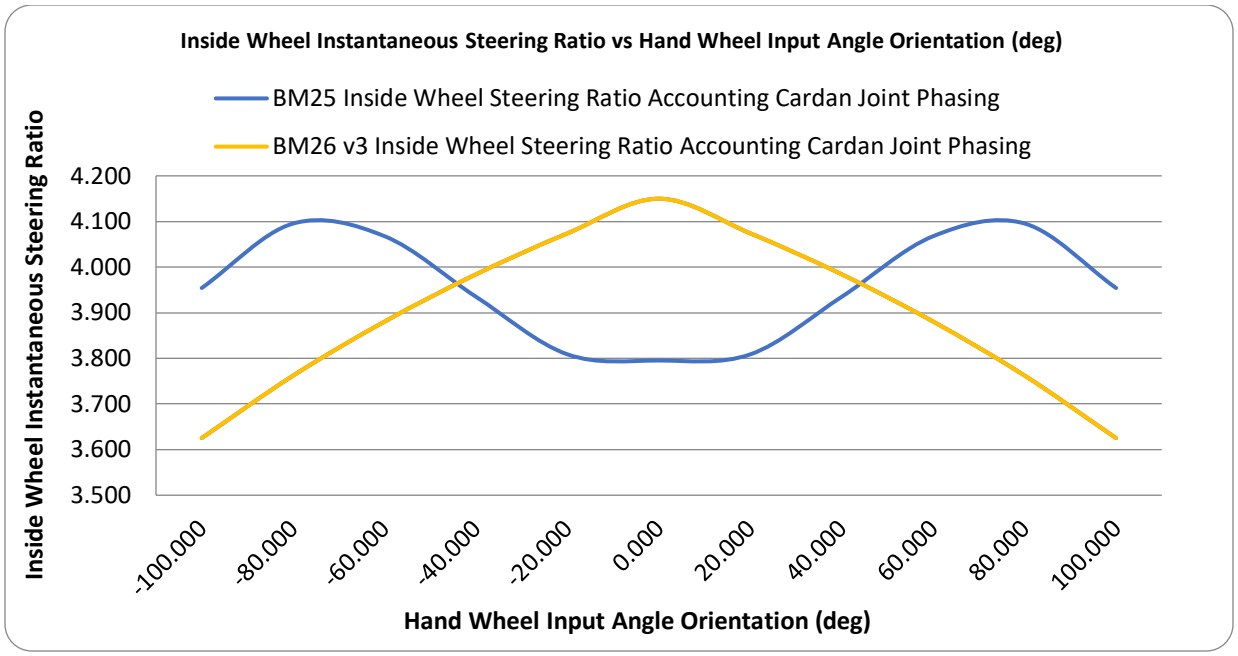
Inside Wheel Instantaneous Steering Ratio vs Hand Wheel Input Angle Orientation (deg)
BM25 Inside Wheel Steering Ratio Accounting Cardan Joint Phasing
BM26 v3 Inside Wheel Steering Ratio Accounting Cardan Joint Phasing
Inside Wheel Instantaneous Steering Ratio
4.200
4.100
4.000
3.900
3.800
3.700
3.600
3.500
-100.000
-80.000
-60.000
-40.000
-20.000
0.000
20.000
40.000
60.000
80.000
100.000
Hand Wheel Input Angle Orientation (deg)

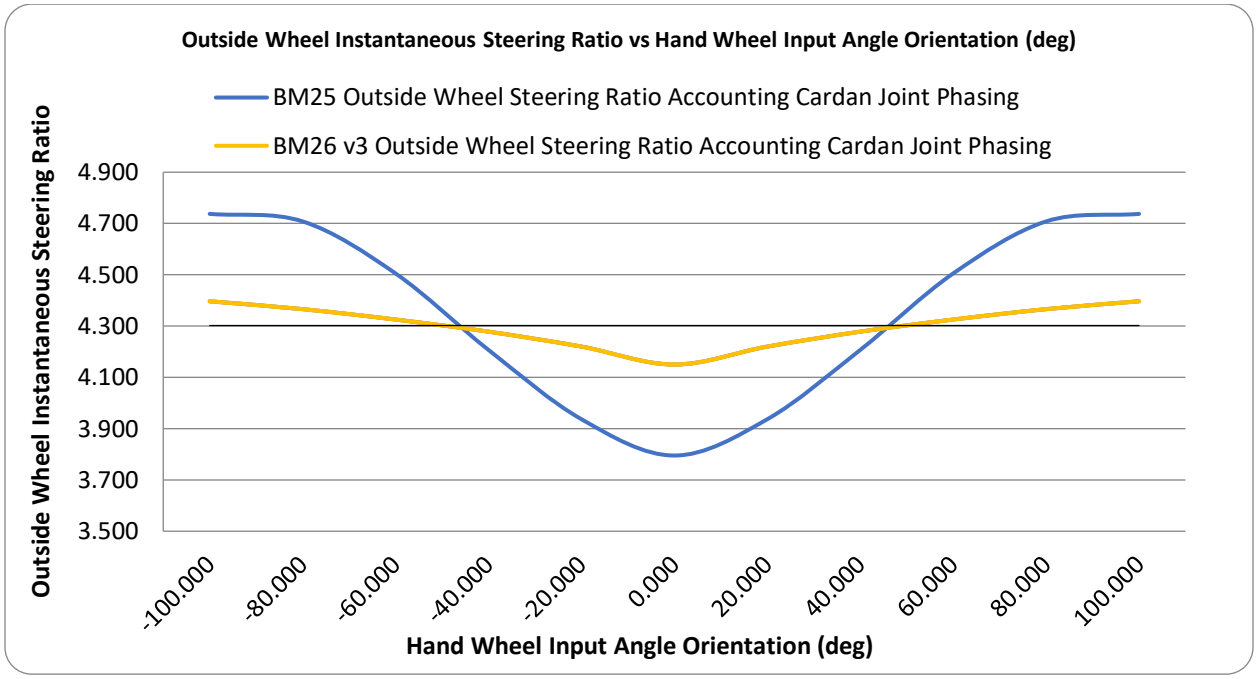
Outside Wheel Instantaneous Steering Ratio vs Hand Wheel Input Angle Orientation (deg)
BM25 Outside Wheel Steering Ratio Accounting Cardan Joint Phasing
BM26 v3 Outside Wheel Steering Ratio Accounting Cardan Joint Phasing
Outside Wheel Instantaneous Steering Ratio
4.900
4.700
4.500
4.300
4.100
3.900
3.700
3.500
-100.000
-80.000
-60.000
-40.000
-20.000
0.000
20.000
40.000
60.000
80.000
100.000
Hand Wheel Input Angle Orientation (deg)

Improvement From BM25 (Steering Column):

Comparing the base steering ratios shows an improvement for any of the BM26 versions over the BM25 version. Benefits of reduced oscillation in the steering ratio:

a. A linear steering ratio creates consistent control gain.
b. More predictable vehicle response for driver (more uniform steering torque increments)

The Lash/Play for Each BM26 Are Compared:

- BM26 v1 showed medium-high lash relative to BM26 v3 and BM26 v2 when tested with all four tires on the ground completely failed the max lash rule as stated in rule V.3.2.5. This rules out version 2 from being selected.
- BM26 v3 showed the least lash from static testing with all four tires on the ground. Based on driver feedback, the lash experienced was much lower than the previous 2 BM26 versions.

The Steering Stiffness BM26 Compared:

- For BM26 v1, driver feedback showed high steering torque, which was not perfectly comfortable for the driver to operate in.
- BM26 v2 did solve the high steering torque that was experienced, but since it did not pass the lash/play requirement, it is ruled out in terms of design selection.
- BM26 v3 showed the most improvement in steering torque and had the least lash, which satisfied both main requirements of the steering column design.

Mass deltas from SolidWorks:

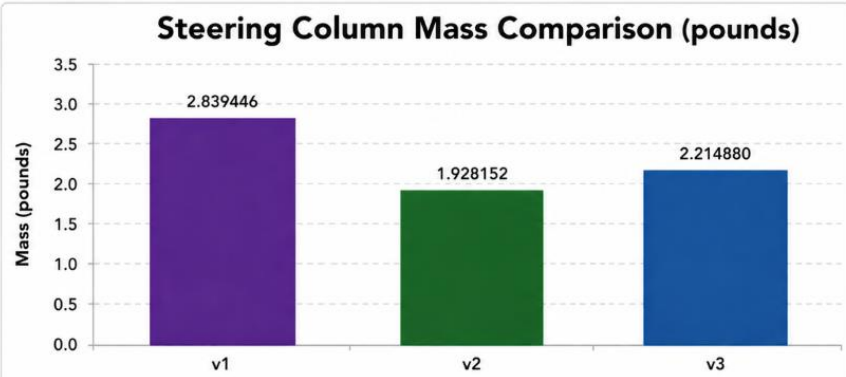

Mass Delta Summary (pounds)	
v1 → v2	-0.911294 (-32.11%)
v2 → v3	+0.286728 (+14.89%)
v1 → v3	-0.624566 (-21.99%)

How the Delta Calculations Were Done

v1 → v2

Delta = v2 − v1
= 1.928152 − 2.839446
= -0.911294 pounds

Percent Change = (Delta / v1) × 100
= (−0.911294 / 2.839446) × 100
= -32.11%

v2 → v3

Delta = v3 − v2
= 2.214880 − 1.928152
= +0.286728 pounds

Percent Change = (Delta / v2) × 100
= (0.286728 / 1.928152) × 100
= +14.89%

v1 → v3

Delta = v3 − v1
= 2.214880 − 2.839446
= -0.624566 pounds

Percent Change = (Delta / v1) × 100
= (−0.624566 / 2.839446) × 100
= -21.99%

Mass deltas measured with real manufactured assembly:

	BM25 (Datum)	BM26 v1	BM26 v2	BM26 v3
Mass (lb)	3.034	3.023	3.080	2.249
% Diff Reduction	0.00%	-0.36%	+1.52%	-29.72%

Nonuniformity between BM25 & BM26 steering ratios:

STEP	BM25	BM26 v3
Max	4.402	4.150
Min	3.795	4.011
Mean	4.159	4.096
Max − Min	0.607	0.139
Nonuniformity = (Max − Min) / Mean	0.1460	0.0339
Nonuniformity (%)	14.60%	3.39%

Nonuniformity Delta/Comparisons between BM25 & BM26 steering ratios:

Metric	Value
Absolute Delta (BM26 − BM25)	−11.21%
Percent Reduction	0.768
Spread Ratio (BM26 / BM25)	0.229
Improvement Factor (Spread_Ratio^-1)	4.37× more uniform

Design Procedure – Steering Rack

The two main approaches for steering rack selection and implementation design include a purchased steering rack with a gearbox embedded within it or a custom-made steering rack. The decision to **purchase** a steering rack was made to save time and avoid potential **troubleshooting issues** that may arise during manufacturing.

The KAZ Technologies steering rack was chosen for the steering system because of these main reasons:

1) Provided low-friction bushings on pinion gear shafts to guide the rack for smooth operation.
2) Includes adjustable trunnion blocks that allow versatile mounting positions and increased rack rigidity.
3) Rack pre-load is fully adjustable.
4) Rack ratio of 4.71” of rack travel per revolution
    a. Contributes to a lower steering ratio, which makes steering faster while also being controllable because of the reduced lash.
    b. Excellent for an autocross setting, most prominent in the FSAE Michigan event.

A Pugh Matrix Comparing Purchasable Steering Racks is Shown:

Criteria	Weight (%)	Datum (Generic Rack Baseline (0))	NARRCO Steering Rack	Formula 7 Steering Rack	KAZ Steering Rack
1) Lash / Play	25	0	**-1**	**2**	**2**
2) Friction / Smoothness	15	0	**0**	**1**	**2**
3) Adjustability	15	0	**0**	**1**	**2**
4) Rack Ratio / Responsiveness	15	0	**1**	**0**	**2**
5) Packaging Flexibility	10	0	**-1**	**1**	**2**
6) Rigidity / Durability	10	0	**0**	**2**	**2**
7) Weight	5	0	**2**	**1**	**0**
8) Cost (USD)	5	0	**1**	**-1**	**1**
Total Weight	**100**	—	—	—	—
Total Weighted Score		**0**	**-0.05**	**1.1**	**1.85**
Rank (1 = Best)		—	**3**	**2**	**1**

Scoring Legend	
SCORE	**DEFINITION**
2	Significantly Better
1	Better
0	Same as Datum
-1	Worse
-2	Significantly Worse

KAZ Steering Rack is the Best Overall Choice

1) Eliminates lash with low friction bushings for precise control

2) Fully adjustable preload and lash for optimal tuning

3) 4.71" rack travel per revolution for fast yet controllable steering

4) Adjustable trunnion blocks for superior packaging flexibility and rigidity

5) Lightweight design (~3.0 lbs)

Design Procedure – Tie Rods

For the tie-rod design, the heavy emphasis was on keeping the same design idea from BM25 and working around lightweight tie rods. Thinner tie rods were designed to withstand tensile/compressive forces from MOTEC loads. Hand calculations were largely focused on buckling under compression and axial loading due to a pin-pin connection.

<u>Front/Rear Tie Rods initial design:</u>

The first design incorporated two 10-32 threaded rod ends (left & right direction), two 3/8 hex inserts, and a 3/8 steel tube.

For the hex inserts, a low-carbon steel hex bar was lathed to shape. A crucial part of this component was that the dimensions of the hex insert shank and the inner diameter of the hollow tube had a corresponding tolerance for a **running** or **sliding** fit. This is to ensure locational adjustment and fitment before fully welding the two parts together.

BM26 v2 hex insert is shown here:

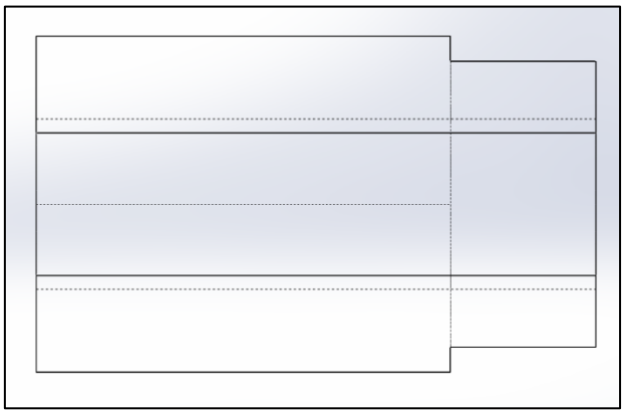

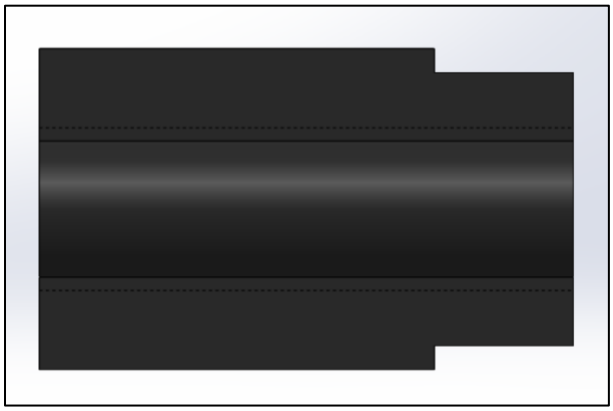

<u>Front/Rear Tie Rods revised design:</u>

Because testing showed that the thinner tie rods result in considerable stiffness reduction, thus larger compliance, it made the v1 design less desirable in increasing vehicle performance. This was taken based on driver input and comparing the BM25 tie rod stiffness vs BM26. Due to time constraints, the design was reverted to the BM25 design but fit to the BM26 geometrical constraints.

BM26 initial front/rear tie rod is shown here:

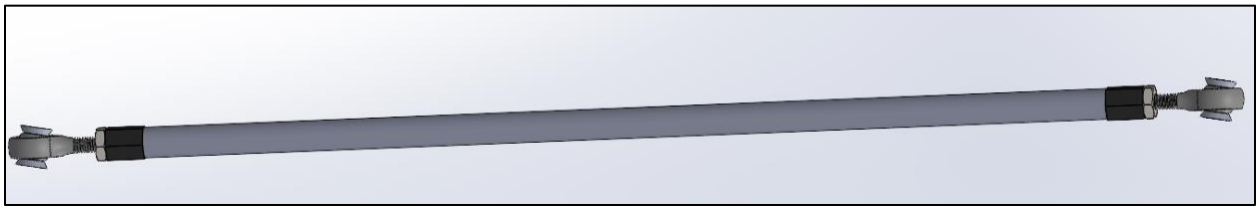

BM26 revised tie rod is shown here:

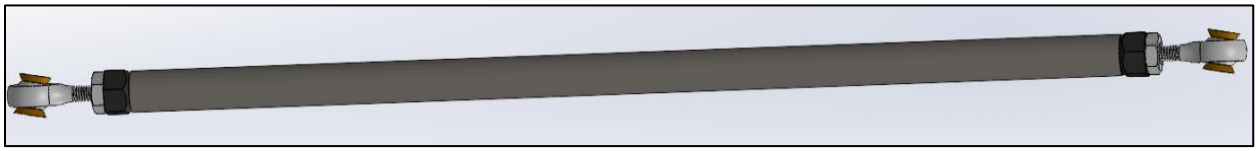

The BM25 design (now revised for BM26) utilized a ½ inch diameter tube and inserts with ¼-28 threaded rod ends. Essentially similar in structure but with slightly different dimensions.

BM26 v3 hex insert is shown here:

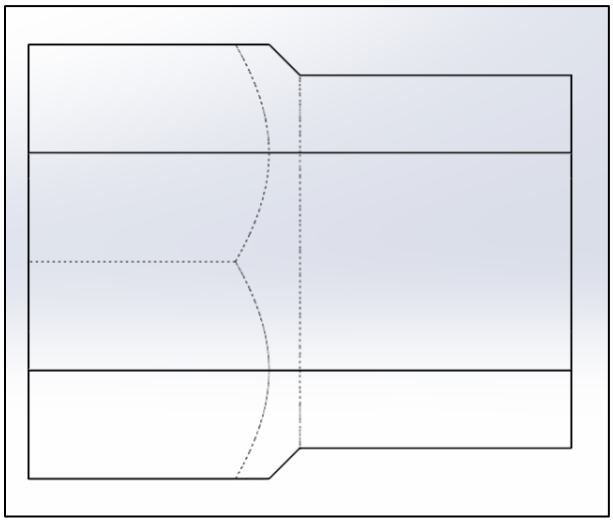

Rear Tie Rods:

The rear tie rods have a very similar design to the fronts, with the biggest difference being the aluminum hex bar instead of a hollow tube and the smaller dimensions of that subassembly's components. The main benefit of the aluminum hex bar was that aluminum could be directly tapped for threading without needing additional lathing and welding processes. However, this design is heavier than last year's design.

BM26 v1 rear tie rod is shown here:

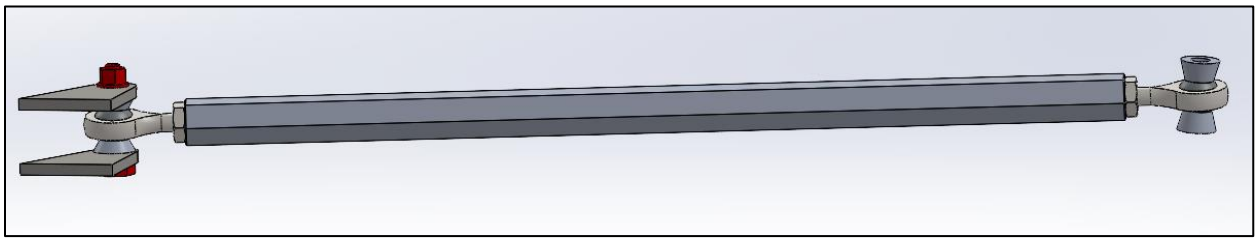

BM26 v2 rear tie rod is shown here:

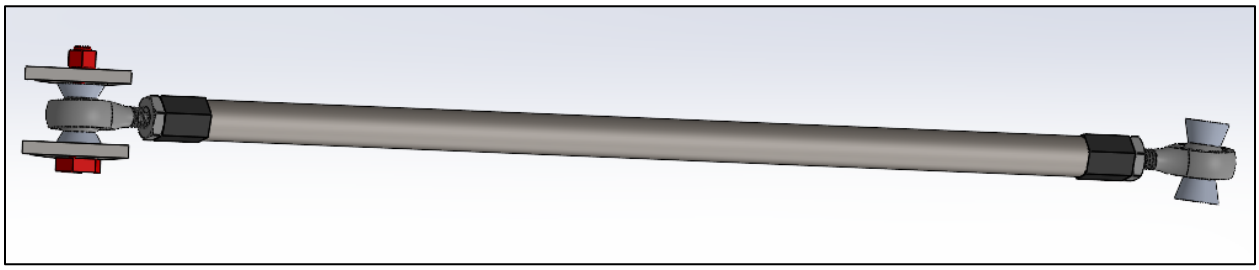

BM26 v3 rear tie rod is shown here:

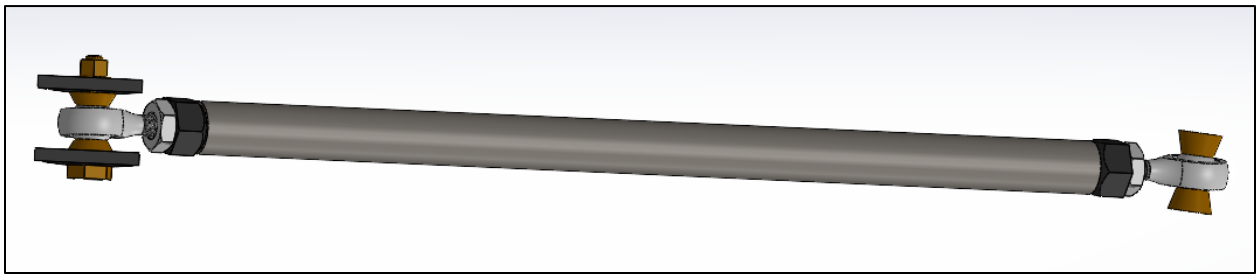

Mention buckling calcs and FEA proved to show minimal deflection and relatively high FoS

1. SHOW FEA results + hand calculations.

Design Procedure – Steering Column Bearing Holder/Mount

The purpose of the bearing holder was to be able to have an easy method to mount/dismount the steering column for any reason.

- Mounted with two AN3 bolts onto steering mount.
- Supports steering input shaft from longitudinal movement (using retainer rings)
- Allows for steering rotation with minimal friction.

Similar designs were rolled over from BM25, with minor modifications, which were needed to implement the required wiring to the steering wheel.

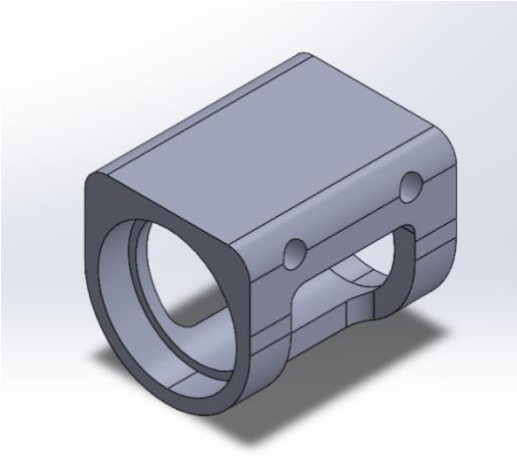

BM25 Bearing holder w/ center rib

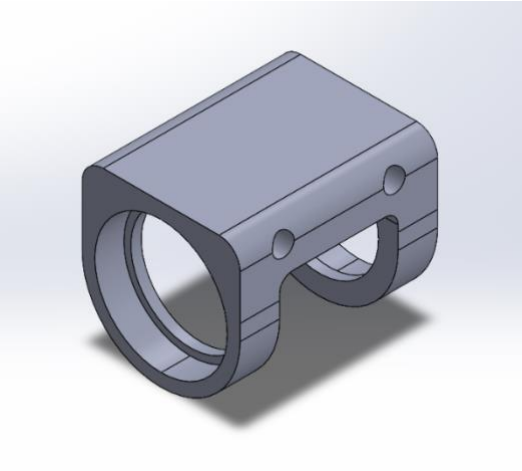

BM26 Bearing holder (no center rib)

CAD Models

Finalized BM26 Steering System (Front Isometric View):

Finalized BM26 Steering System (Front View):

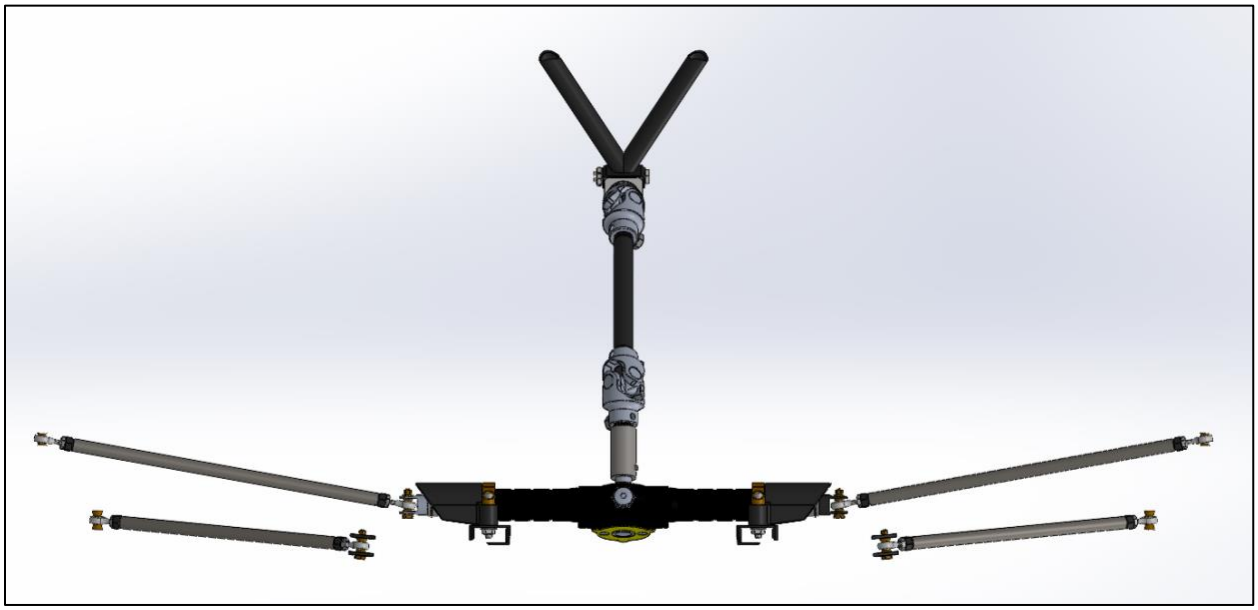

Finalized BM26 Steering Column & Support (Front + Side View):

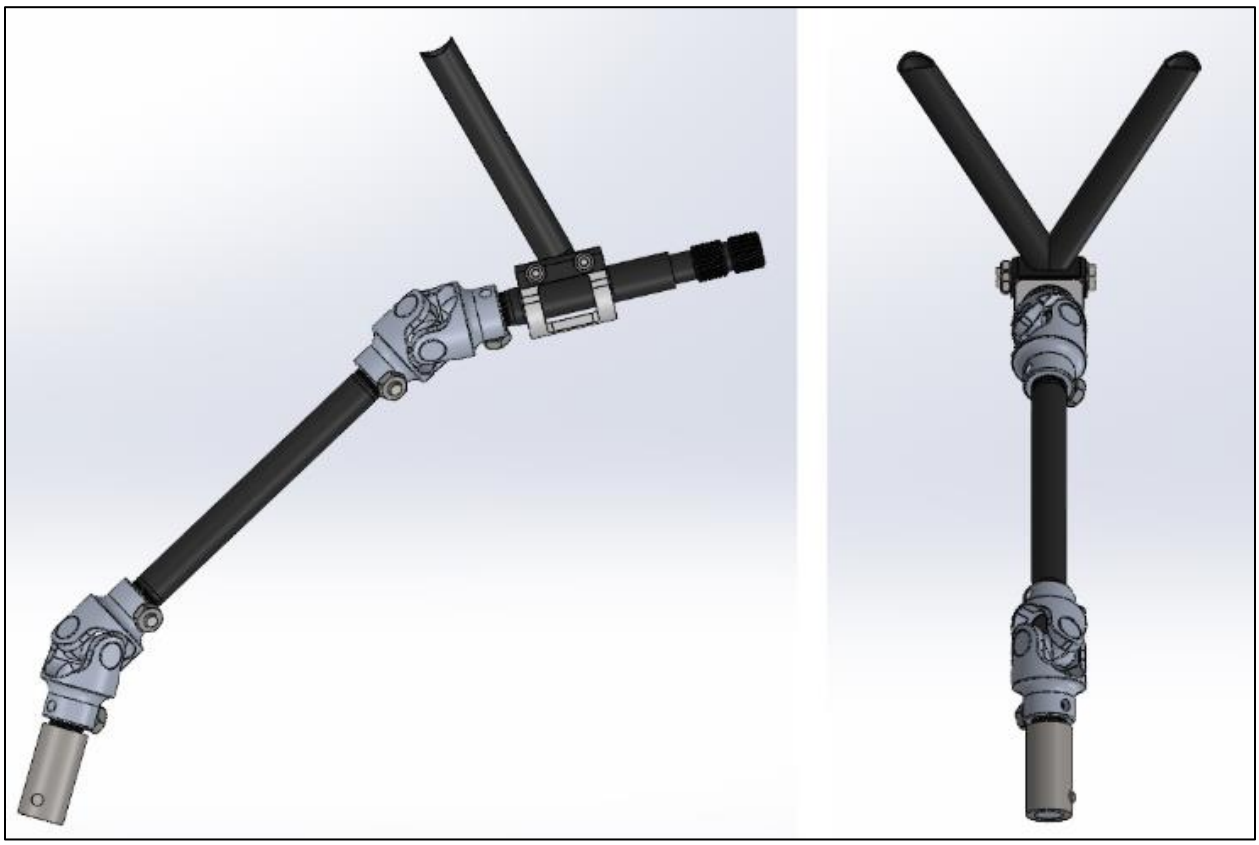

Finalized BM26 Steering Rack Assembly (3 Views):

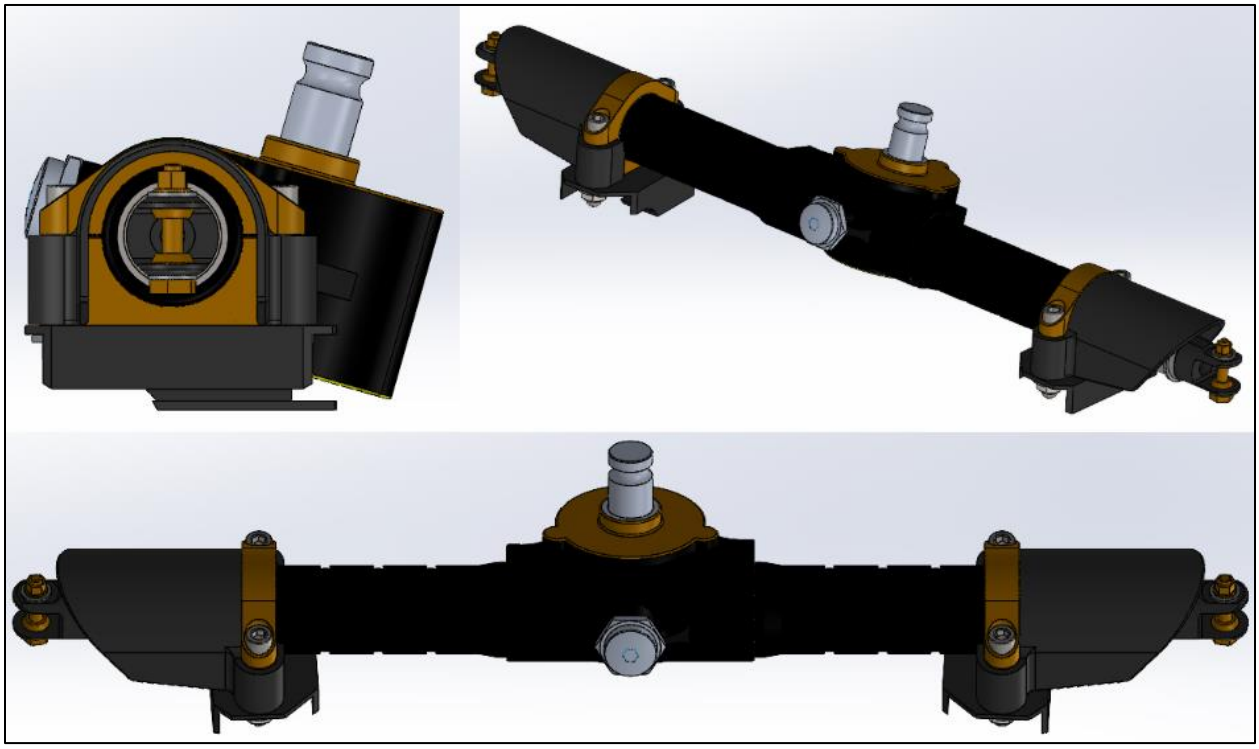

Finalized BM26 Front Tie Rod:

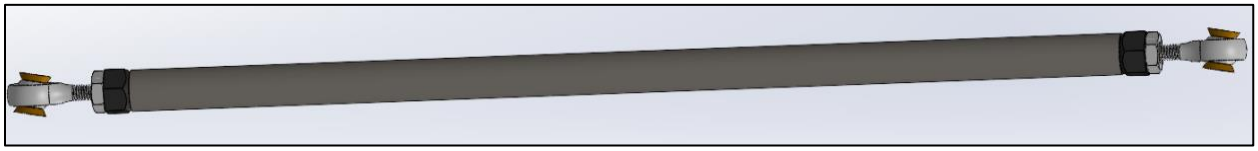

Finalized BM26 Rear Tie Rod:

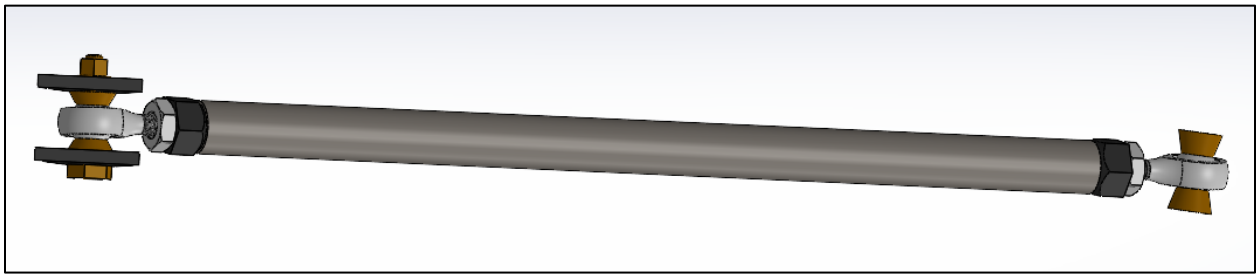

Steering Quick Release Electrical Connector Assembly (Exploded View):

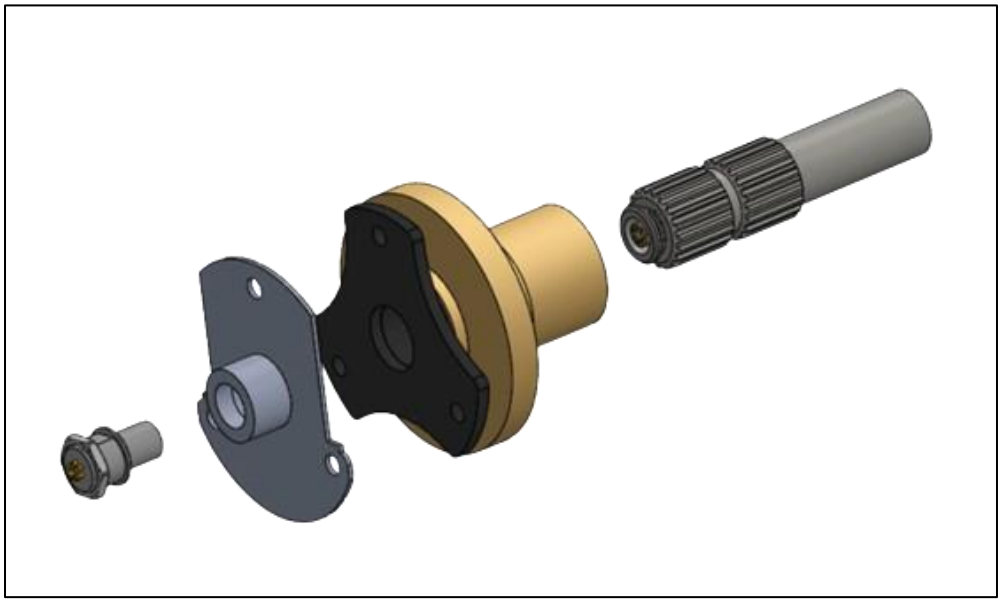

Simulations

Manufacturing

BM26 v1 Front Tie Rods:

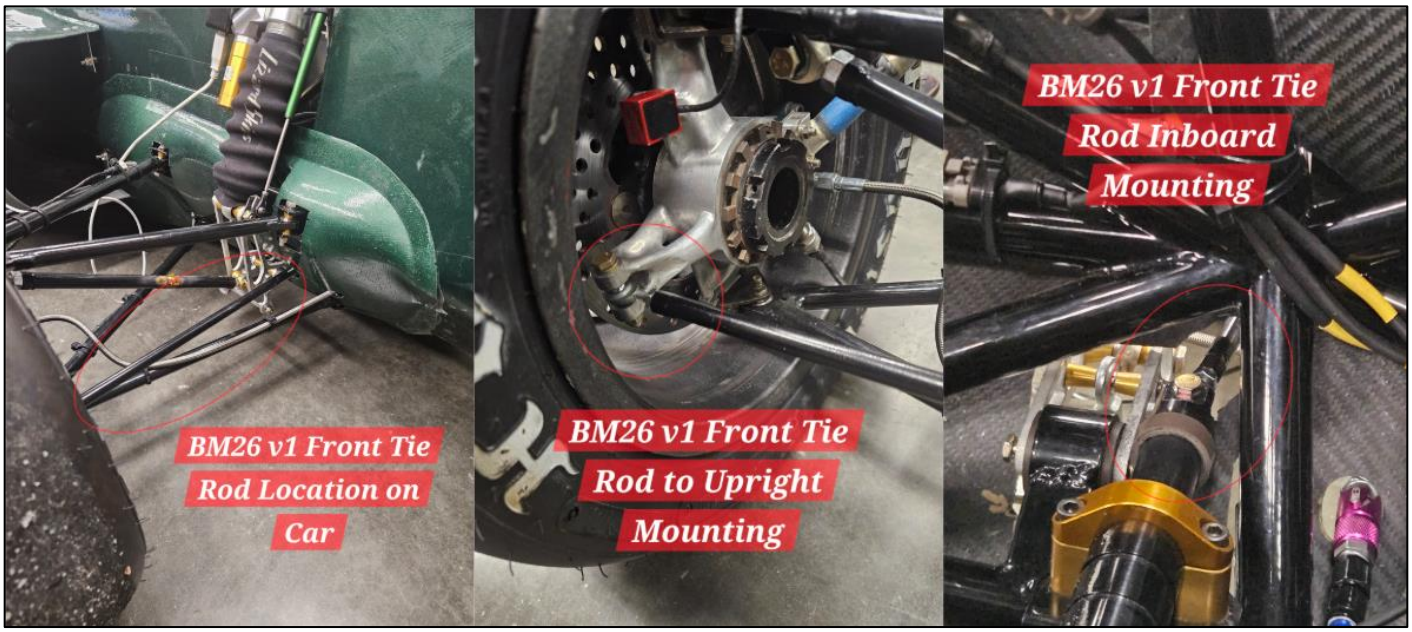

BM26 v3 Steering Column:

Testing

Works Cited

https://openscholarship.wustl.edu/cgi/viewcontent.cgi?article=1098&context=mems500

https://www.youtube.com/watch?v=HrcQj6H2YMk

https://cvsa.org/wp-content/uploads/International-Roadcheck-Vehicle-Inspection-Cheatsheet.pdf#:~:text=Check%20the%20steering%20lash%20by%20turning%20the,until%20the%20tires%20start%20to%20move%20again

http://downloads.optimumg.com/Software/OptimumKinematics/website/Help_File.pdf

https://www.researchgate.net/publication/399940177_Study_on_Unified_Control_of_Drifting_and_Conventional_Driving_for_Path_Tracking/fulltext/69708a53e806a472e6a4d971/Study-on-Unified-Control-of-Drifting-and-Conventional-Driving-for-Path-Tracking.pdf

https://www.fsaeonline.com/content/Cockpit%20Control%20Forces%20SI%20SAE.pdf

http://stevensprojectportfolio.wordpress.com/wp-content/uploads/2017/07/ug-thesis.pdf

Auxiliary (may be redmoved)

- **Minimizing lash and compliance** ensures that what the driver inputs into the steering wheel is what they expect as the output out of the steering system without lag, and thus into the tires.

The general definition of the steer ratio is also referenced to the right which will be the core formula used to calculate the steering ratio for the average, inside, and outside wheels. Using rack displacements on the left and simulating the toe change on SolidWorks, the following data is obtained:

BM25 Base Steering Ratio Results:

BM25 Outside Wheel Steer Angle (deg)	BM25 Outside Wheel Steer Ratio	BM25 Inside Wheel Steer Angle (deg)	BM25 Inside Wheel Steer Ratio	BM25 AVG Steer Ratio
-22.920	4.363	-27.460	3.642	4.002
-18.450	4.336	-21.210	3.772	4.054
-13.950	4.301	-15.450	3.883	4.092
-9.400	4.255	-10.050	3.980	4.118
-4.760	4.202	-4.920	4.065	4.133
0.000	4.141	0.000	4.141	4.141
4.760	4.202	4.920	4.065	4.133
9.400	4.255	10.050	3.980	4.118
13.950	4.301	15.450	3.883	4.092
18.450	4.336	21.210	3.772	4.054
22.920	4.363	27.460	3.642	4.002

The transformation functions ω_co/ ω_bi are obtained from the following formula:

$$\frac{\omega_{co}}{\omega_{bi}} = \frac{\cos(180-\alpha_b) * \cos(180-\alpha_c)}{\cos^2(180-\alpha_c) * \sin^2(\theta_{bi}+90) + \cos^2(180-\alpha_b) * \cos^2(\theta_{bi}+90)}$$

Θ_{bi} represents the steering wheel input angles applied at a particular instant. The alpha α variables represent the corresponding spatial angles that dictate the orientation of each cardan-joint in a 2 universal-joint setup.

Then, the subsequent formula can be used with the transformation function to convert to a new instantaneous steering ratio value:

$$i_{instant}(\theta_{sw}) = i_{avg} * \left(\frac{\omega_{co}}{\omega_{bi}}\right)^{-1}(\theta_{sw})$$

Steering ratio calculations were determined for the following designs:

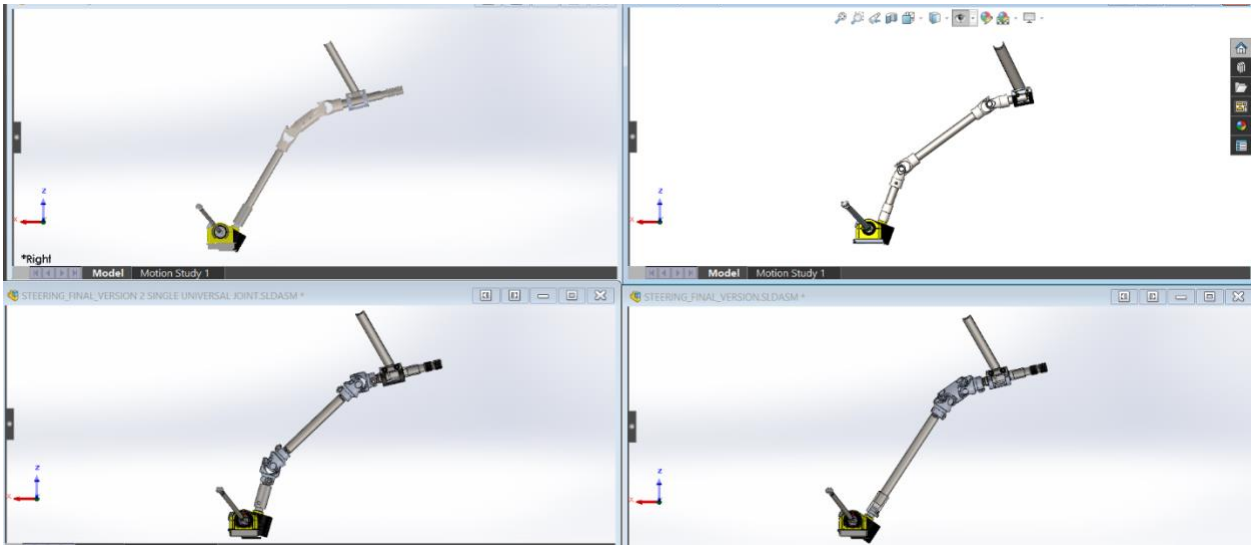

(Top left: BM26 v1, Top right: BM25, Bottom Left: BM26 v3, Bottom Right: BM26 v2)

Mass Properties Reference Selection for Comparing Steering Column:

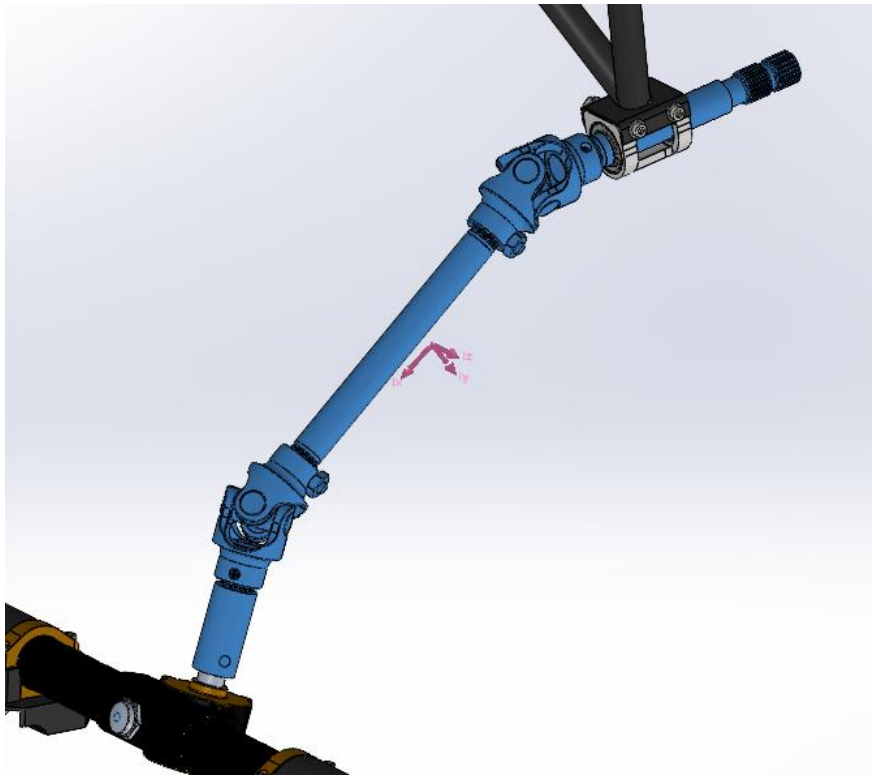

(Example shows BM26 v3 mass properties being measured on SolidWorks)

Nonuniformity Sample Calculation:

$$\text{Nonuniformity} = \frac{\max - \min}{\text{mean}}$$

Spread, Spread Ratio, & Improvement Factor Sample Calculation:

1. CALCULATE SPREAD (Max – Min)

$$\text{Spread} = \text{Max} - \text{Min}$$

BM25: $\text{Spread}_{BM25} = 4.402 - 3.795 = 0.607$

BM26 v3: $\text{Spread}_{BM26} = 4.150 - 4.011 = 0.139$

2. SPREAD RATIO

$$\text{Spread Ratio} = \frac{\text{Spread}_{BM26}}{\text{Spread}_{BM25}} = \frac{0.139}{0.607} = 0.229 = 22.9\%$$

3. IMPROVEMENT FACTOR

$$\text{Improvement Factor} = \frac{\text{Spread}_{BM25}}{\text{Spread}_{BM26}} = \frac{0.607}{0.139} = 4.37$$

Comments:

- Start with V1 design, and priorities on this design.
- Lash target was around 4.7 deg (improve over BM25 w/ 1.5 FOS from 7 degree legality). Mention first design did not achieve lash target but had increased lateral play in column.
- Put emphasis on the issues that were faced on initial design and tell them that we resolved the issues with a revamped design that prioritizes on lowering lash more, less lateral play, and weight loss.
- Always mention weight stuff: Steering rack weight reductions
- KAZ steering rack benefits offers more adjustability.
- Poke a yoke methodology for accurate tabs mounting location.
- Compliance calculation can be spoken about to compared aluminum vs steel.
- Woodward single u-joint = 309 g
- Bolt check preload calculations for all steering fasteners
- No noticeable difference once v2 front tie rods and v3 rear tie rods were applied to car.